COMPACT TRACK LOADER

TL12R-2

TAKEUCHI

From World First to World Leader

Operating Weight: 5,710 kg

TOUGH, POWERFUL, RELIABLE

Pilot Operated Controls

Battery Access Panel

Lower Cross Member & Step

Oversized Arm Cylinders

The TL12R-2 features a radial arm loader arrangement, and demonstrates Takeuchi's continued commitment to product improvement and innovation. It features a completely redesigned operator's station with a 5.7" color multi-information display excellent feature set, and updated rocker switches that control a wide range of machine functions.

Cab models have a smooth, low effort overhead door that improves entry and egress and enables the loader to be operated with the door in the raised or lowered position.

An updated undercarriage with a wide block quiet ride track system provides better flotation, improved ride quality, and a reduction in noise and vibration. A powerful, 81.8 kW engine meets the latest EU Stage V / EPA Tier 4 emissions standards while delivering outstanding power and torque for impressive performance in the most demanding applications

Spacious operator's station with easy to reach controls and switches.

Product Features & Specifications

ENGINE

- EU Stage V / EPA Tier 4 Emission Compliant
- Turbocharged and Intercooled
- DOC+DPF+SCR Exhaust After Treatment
- Active Power Control Power Management System
- ECO Mode
- Foot Throttle Control
- Automatic Fuel Bleed System
- Extended Life Coolant
- High Capacity Radiator, Hydraulic Oil Cooler and Intercooler Mounted Side-by-Side on Swing Out Frame
- Double Element, Air Cleaner

ELECTRICAL

- 12 volt System with 80 amp Alternator
- Heavy Duty, Quick Access Battery
- LED Work Lights, Front and Rear
- 5.7" Color Multi-Informational Display with Rear View Camera
- Sealed Rocker Switches
- Back-up Alarm
- Horn
- TFM (Takeuchi Fleet Management; GPS)*

UNDERCARRIAGE AND FRAME

- 450 mm Quiet Track Design with Flotation Tread
- Long Track Frame
- Fully Welded Frame with Integrated Cross Members
- Rear Bumper Integrated into Frame
- Front and Rear Tie-Down and Lift Points
- Double Reduction Planetary Track Drives
- 2-Speed Travel

OPERATOR'S STATION

- Tilt-up Operator's Station
- Deluxe High Back Adjustable Suspension Seat
- Rear Pivoting Seat Bar with Integrated Arm Rests
- Retractable 2" Seat Belt
- ROPS/FOPS Level I
- FOPS Level II Roof Guard Kit (optional)
- Polycarbonate Front Door (Cab optional)*
- Pressurized Cab with Roll-up Door, Air Conditioning, Heat, Defrost, Front Wiper and AM/FM/MP3 Radio (Cab Only)
- Rear Wiper (Cab Standard Equipment in Europe Only)
- 3 Point Seat Belt (optional)

HYDRAULIC & WORKING EQUIPMENT

- Power Radial Arm Design
- Lower Front Cross Member
- Cushioned Arm Cylinders
- Arm Float with Detent
- Hydraulic Joystick Controls
- Proportional Auxiliary Controls with Detent
- Pressure Relieving Flat Faced Coupler Body
- Hydraulic Self Leveling (ON/OFF)
- Mechanical Quick Hitch
- 14-Pin Connector with Push Button Control (optional)
- Hydraulic Quick Hitch (optional)
- High Flow Auxiliary Hydraulics 153.0 L/min (optional)
- Secondary Auxiliary Circuit 88.0 L/min (optional)
- Ride Control (optional)
- Pattern Change Valve (ISO or H) (optional)
- Manual Parking Brake (optional)

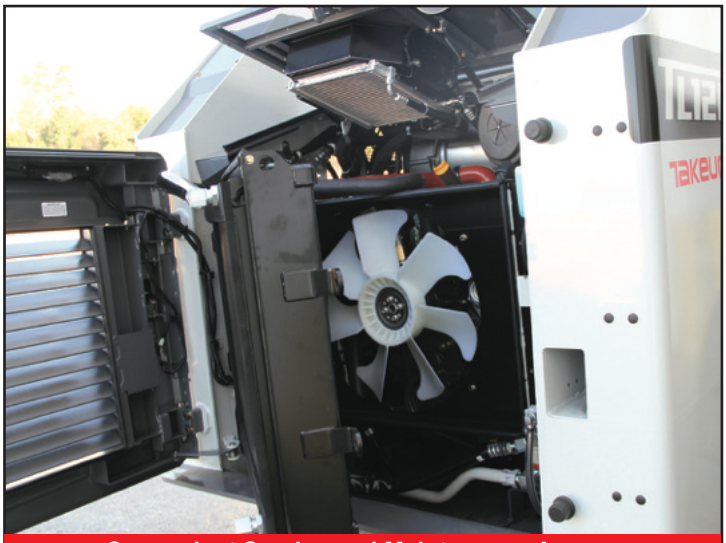

Convenient Service and Maintenance Access

Integrated Undercarriage

*Functions may not be available in all countries, so please consult your Takeuchi dealer for details.

OPERATING PERFORMANCE	
Operating Weight - Canopy	5,580 kg
Cab	5,710 kg
Tipping Load	3,915 kg
Rated Operating Capacity (ISO 14397-1) @ 35%*	1,350 kg
Operating Load at 50% of Tipping Load	1,958 kg
Bucket Breakout Force	36.5 kN
Lift Arm Breakout Force	35.9 kN
Traction Force	62.3 kN
Ground Pressure - Canopy	32.0 kPa
Ground Pressure - Cab	32.7 kPa
Travel speed - Low	8.1 km/h
High	11.8 km/h

* Operating capacity of compact track loaders is rated according to ISO 14397-1 at no more than 35% of the tipping load

HYDRAULIC SYSTEM	
Auxiliary Flow - Primary Circuit	88.0 L/min
Auxiliary Flow - High Flow (optional)	153.0 L/min
Auxiliary Flow - Secondary Circuit (optional)	88.0 L/min
Hydraulic System Pressure	24.0 MPa

ENGINE	
Make / Model	Kubota / V3800
Engine Displacement	3,769 ml
Rated Output (ISO 14396)	81.8 kW / 2,400 min^{-1}
Maximum Torque	379.3 Nm / 1,500 min^{-1}

FLUID CAPACITIES	
Engine Lubrication	13.2 L
Cooling System	18.0 L
Fuel Tank Capacity	119.5 L
Hydraulic Reservoir Capacity	50.0 L
Hydraulic System Capacity	79.0 L
DEF Tank Capacity	18.0 L

SAFETY AND HEALTH	
Vibration Levels	
Hand / Arm	≦ 2.5 m/ s^2
Body	≦ 0.5 m/s^2
Noise Level	
Sound Power Level	L_{WA} 104 dB

5.7” Color Display

Rear View Camera

Roll Up Door

Multi-Function Switch Bank

TL12R-2 Compact Track Loader

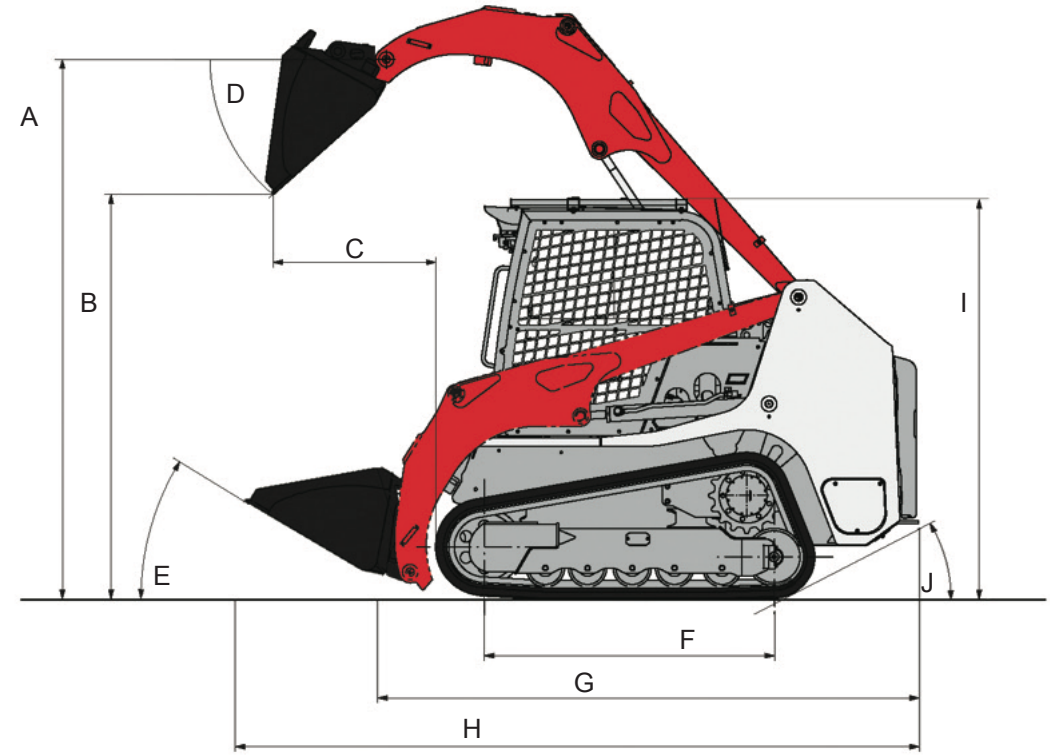

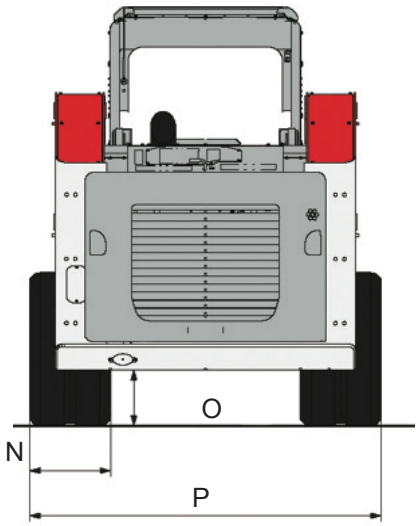

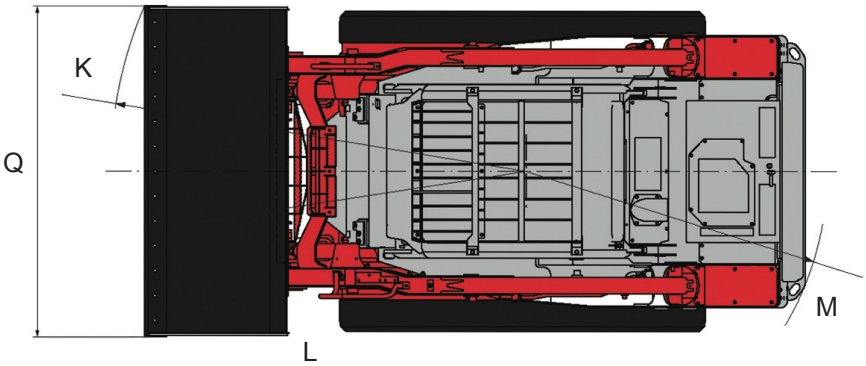

	MACHINE DIMENSIONS	
A	Max. Lift Height to Bucket Pin	3,200 mm
B	Dump Height Fully Raised	2,400 mm
C	Dump Reach Fully Raised	960 mm
D	Dump Angle	40°
E	Rollback Angle	30°
F	Track Base	1,715 mm
G	Machine Length	3,205 mm
H	Transport Length	4,045 mm
I	Transport Height	2,330 mm
I'	Transport Height with Roof Guard	2,380 mm
J	Departure Angle	30°
K	Clearance Circle with Bucket	2,555 mm
L	Clearance Circle without Bucket	1,635 mm
M	Clearance Circle Rear	1,850 mm
N	Track Width	450 mm
O	Ground Clearance	320 mm
P	Overall Width without Bucket	1,960 mm
Q	Bucket Width	2,030 mm

© 2020 Takeuchi MFG. Co., Ltd. All Rights Reserved. In accordance with our established policy of continued improvement, specifications and features are subject to change without notice. Pictures may show options other than standard equipment.

TAKEUCHI™
From World First to World Leader

FORM: TL12R-2 Compact Track Loader Spec Sheet - Feb. 2020